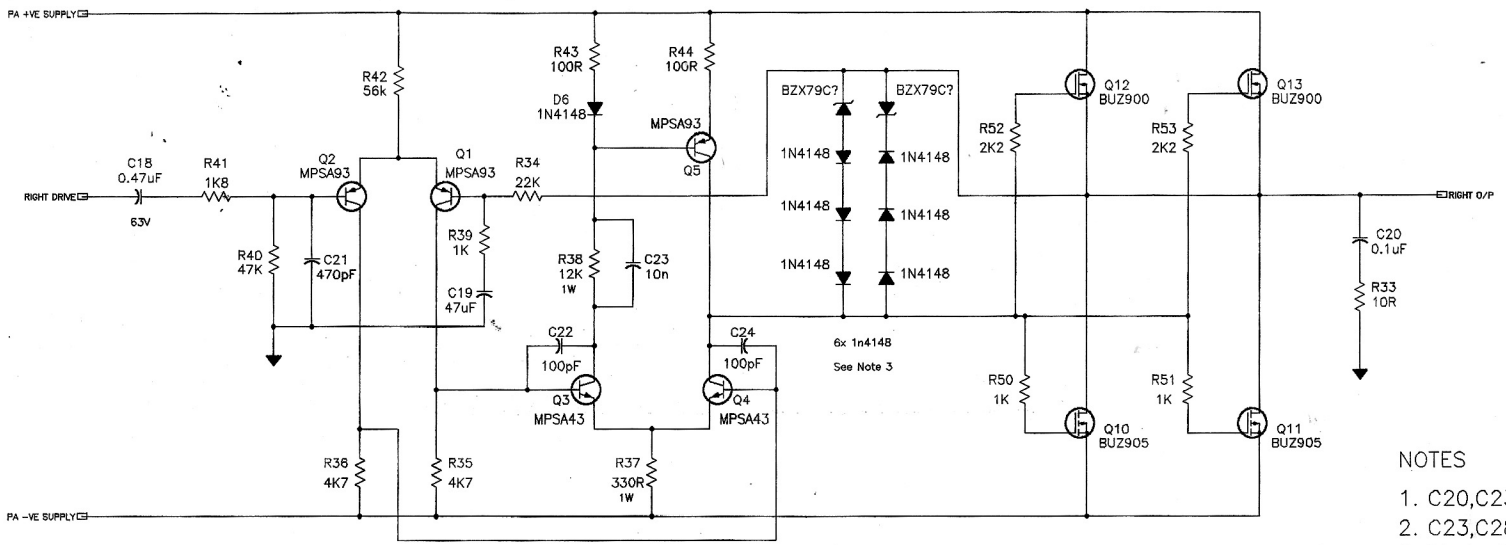

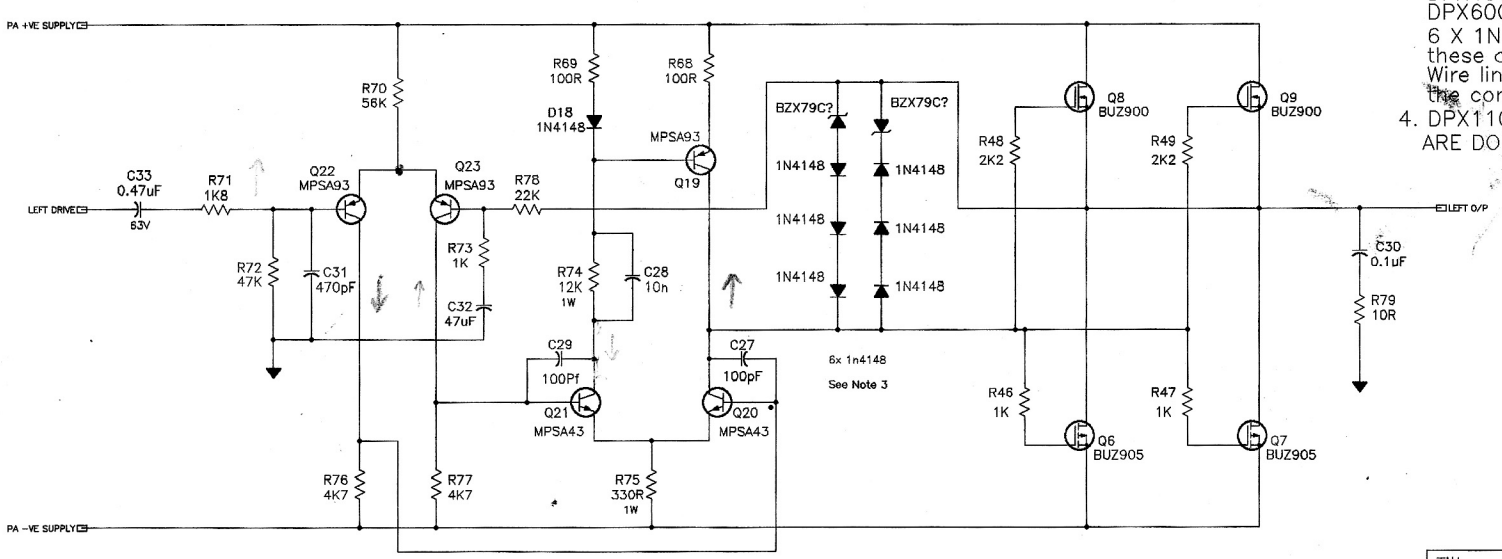

NOTES

1. C20,C23,C28,C30 = 250V
2. C23,C28 = 150V
3. Diode Chains to FET Gates
   ZENER DIODES IN :-
   DPX400 & DPX1100 = BZX79C5V1
   DPX600 & QPX1200 = BZX79C6V2
   6 X 1N4148 in each channel, 4 of these are shorted until test
   Wire link is removed to give the correct output power
4. DPX1100 ALL OUTPUT DEVICES ARE DOUBLES = BUZ900D & BUZ905D

Title	POWER AMPLIFIER OUTPUT STAGE	
Size A2	Number DPX400/600/1100/QPX1200	Rev A
Date 26/8/95	Drawn by D.J.R.	
Filename DPX_AMPS.S01	Sheet 2 of 3	